TECHLINE SYSTEM SOLUTIONS

www.linak.com/techline

LINAK®
WE IMPROVE YOUR LIFE

Plug & Play **with LINAK system solutions**

TECHLINE® system solutions improve functionality and add value to your application. Our systems offer:

- Simple Plug & play functionality
- Easy integration into your application
- Time saving installation
- Significant minimisation of installation failures
- The possibility of simultaneous run with up to two actuators at a time
- Signal cable with open leads enables you to connect your own control along with an RF or Bluetooth solution. These can be run at the same time

TECHLINE system solution examples

Bluetooth® Solution

App compatible
with iPhone 4s
and up
plus Android
LINAK® Control

The TECHLINE Bluetooth solutions run via a LINAK Bluetooth control app. Download it on:

Download on the App Store

GET IT ON Google play

Bluetooth is a registered trademark of Bluetooth SIG, Inc. and any use of such marks by LINAK is under license.

TECHLINE® system solution examples

Bluetooth® Solution

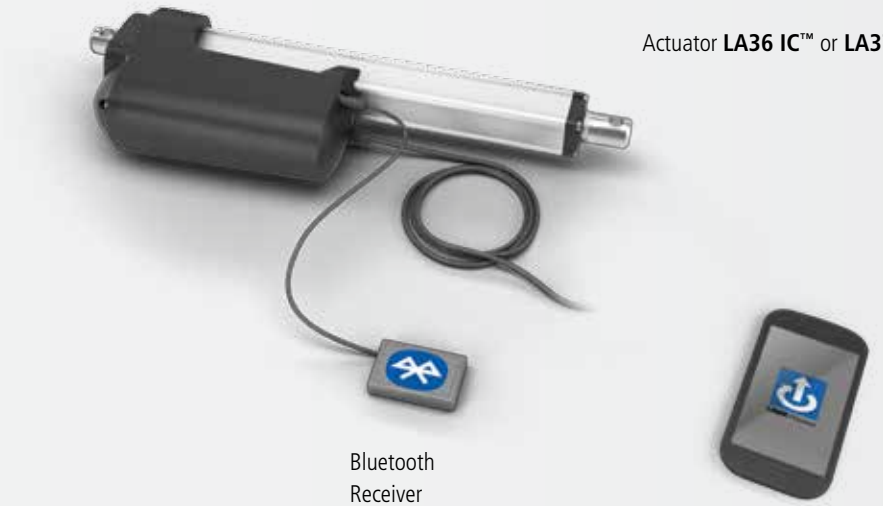

TECHLINE system solution examples

Simultanious run Solution

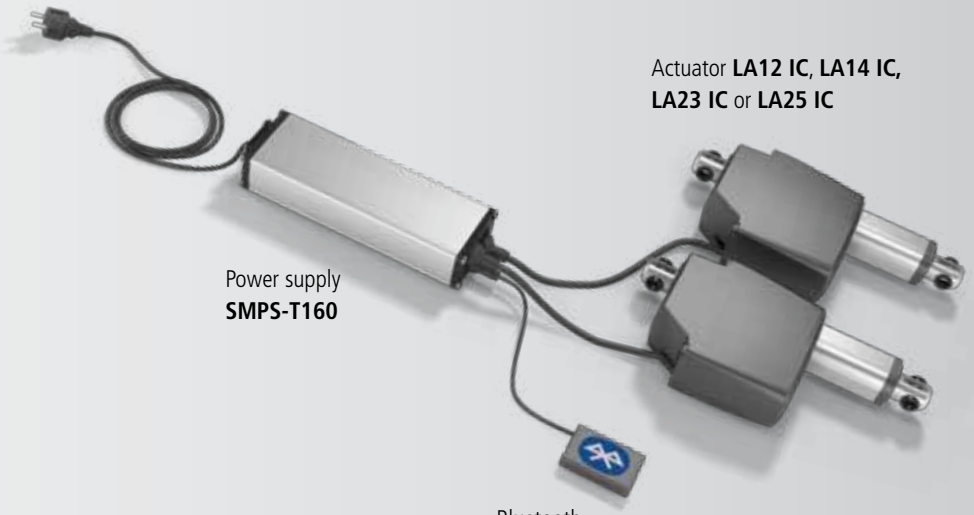

App compatible
with iPhone 4s
and up
plus Android
LINAK Control

Compatible with Bluetooth, RF or other alternative controls.

The cable(s) between the SMPS-T160 and the actuators LA14 and LA25 can be either 300mm or 1500mm.
The cable(s) between the SMPS-T160 and the actuators LA12, LA23 and LA35 are 1500mm.

TECHLINE® system solution examples

RF Solution

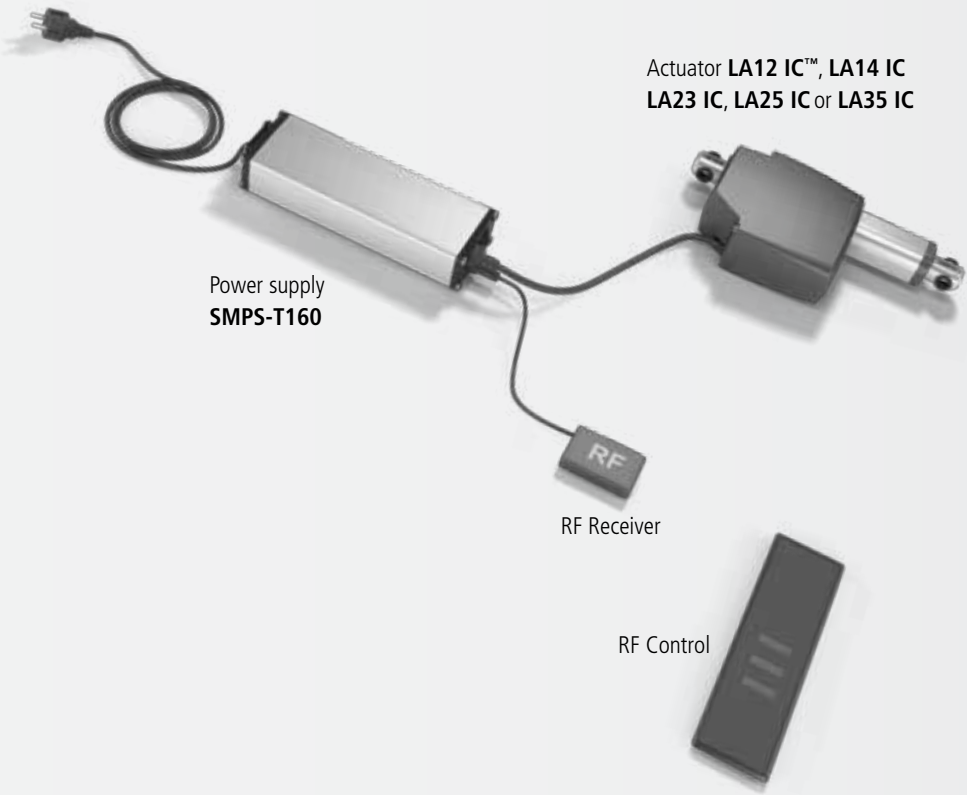

TECHLINE system solution examples

RF Solution

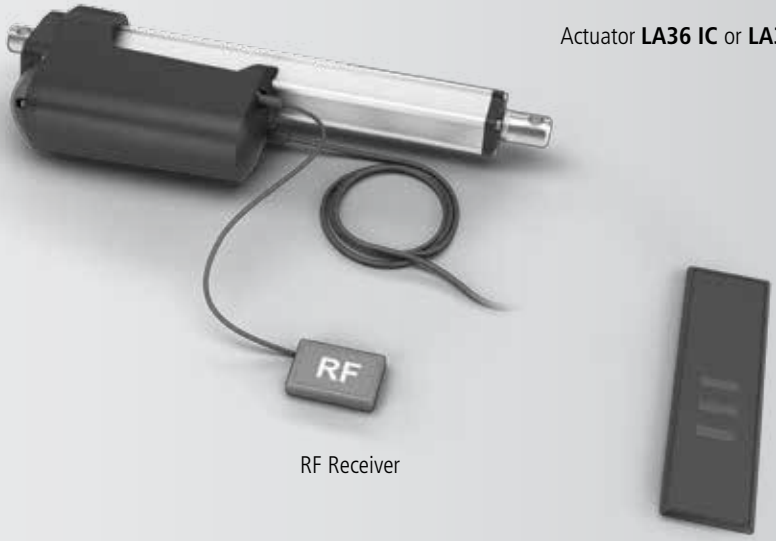

Actuator **LA36 IC** or **LA37 IC**

RF Receiver

RF Control

TECHLINE® system solution examples

Flying wire Solution

* Please note that with an LA35 flying wire solution, the signal cable is connected to the actuator itself, and not the SMPS.

Actuator

Actuator LA37 - solid and powerful

Tough applications require equally tough actuator solutions. The actuator LA37 is specifically developed for heavy-duty applications in harsh environments, where there is a need for high lifting capacity and holding force. The LA37 offers the well-known LINAK quality, guaranteeing you a maintenance-free product with a long lifetime.

LA37 features:

- Max thrust up to 15,000 N
- Max speed up to 3.5 mm/sec
- Standard stroke 100-600 mm
- Protection class IP66 / IP69K
- Voltage 12 or 24V DC
- Heavy-duty aluminum housing for harsh conditions
- Integrated brake, high self-locking ability
- Hall sensors or potentiometer for relative or absolute feedback, regardless of the stroke length
- Built-in endstop
- Solid metal construction
- Hand crank for manual operation
- Salt spray and chemical tested
- High-pressure cleaning resistant
- **Available with IC™**

INTEGRATED CONTROLLER

Actuator

Actuator LA36 - reliable and tough

The actuator LA36 is one of the most solid and powerful LINAK actuators, designed to operate under extreme conditions. The LA36 is a maintenance-free product with a long lifetime and a high IP degree. This high-quality actuator offers a very strong alternative to hydraulic solutions.

LA36 features:

- Max thrust up to 10,000 N
- Max speed up to 160 mm/sec
- Standard stroke 100-999 mm
- Heavy-duty aluminium housing for harsh conditions
- Protection class IP66 / IP69K
- Integrated brake, high self-locking ability
- Voltage 12, 24 or 36 V DC
- Hall sensors or potentiometer for relative or absolute feedback, regardless of the stroke length
- Endstops: slip clutch or built-in limit switches
- Solid metal construction
- Hand crank for manual operation
- Salt and chemical tested
- High-pressure cleaning resistant
- **Available with IC™**
- **Available with IECEx and ATEX certifications**

IC INTEGRATED CONTROLLER

Actuator

Actuator LA35 - flexible and powerful

The actuator LA35 is a powerful actuator with a low noise level. It is designed for a variety of both indoor and outdoor applications and provides a practical, cost-effective solution with low power consumption.

LA35 features:

- Max thrust up to 6,000 N in push and up to 4,000 N in pull
- Stroke up to 600 mm
- Protection class IP66 dynamic / IP69K static
- Voltage 12 or 24 V DC
- Heavy-duty aluminium housing for harsh conditions
- Easy to use interface – with integrated power electronics for direct connection to control system
- Potential free limit switches as an option
- Hall sensors or potentiometer for relative or absolute feedback, regardless of the stroke length
- Built-in limit switches and brake
- **Available with Basic IC™**

INTEGRATED CONTROLLER

Actuator

Actuator LA25 - tough and compact

With its robust design, high IP degree and aluminium housing, the actuator LA25 is ideal for harsh environments where operation under extreme conditions is required. Furthermore, the compact dimensions of the LA25 make it applicable for confined spaces.

LA25 features:

- Max thrust up to 2,500 N
- Max speed 13 mm/sec
- Standard stroke 20-300 mm
- Protection class IP66 and IP69K
- Voltage 12 or 24 V DC
- Built-in electrical endstop
- **Available with IC™**
- **Available with IECEx and ATEX certifications**

IC INTEGRATED CONTROLLER

Actuator

Actuator LA23 - small and strong

The actuator LA23 is a small and strong push or pull actuator with a high lifting force up to 2500N. The LA23 can be used in various applications where size is important.

LA23 features:

- Max thrust up to 2,500 N
- Max speed 9.4 mm/sec
- Standard stroke 20-300 mm
- Protection class IPX6
- Voltage 12 or 24 V DC
- Electrical and mechanical endstop
- **Available with Basic IC™**

INTEGRATED CONTROLLER

Actuator

Actuator LA14 - robust and reliable

The actuator LA14 is a very tough actuator with a high IP degree and aluminium housing, making it ideal for use in harsh and demanding environments.

The LA14 offers top quality in every detail and ensures reliable performance in temperatures ranging from -40° to +85 °C. With its small size the LA14 is well suited for applications that require short linear movements.

LA14 features:

- Max thrust up to 750 N
- Max speed up to 45 mm/sec
- Standard stroke 40-130 mm
- Voltage 12 or 24 V DC
- Protection class IP66 dynamic / IP69K static
- Available with IECEx and ATEX certification
- **Available with IC™**

IC INTEGRATED CONTROLLER

Actuator LA12 - reliable and compact

Thanks to its small size and outstanding performance, the actuator LA12 provides a practical and cost-effective alternative to small-scale traditional hydraulic and pneumatic systems. The LA12 is ideal for applications requiring short linear movements.

After many years on the market, the actuator LA12 demonstrated that it is a very reliable and robust actuator that can handle almost any situation and challenge.

LA12 features:

- Max thrust: 750 N
- Max speed: 40 mm/sec
- Standard stroke: 40-130 mm
- Protection class IP66
- Voltage 12-24 V
- **Available with Basic IC™**

IC INTEGRATED CONTROLLER

Controls

HB40

The TECHLINE HB40 handset is intended to be used with the SMPS-T160. This sturdy compact unit is ergonomically designed and ideal for a vast range of applications.

HB40 features:

- Robust plastic housing
- Protection class up to IP66
- Compatible via SMPS-T160 with:
  LA12 IC, LA14 IC, LA23 IC, LA25 IC, LA35 IC
- Compatible with:
  LA36 IC, LA37 IC

DP

The DP has a compact design and can control up to three actuators independently.

DP features:

- Protection class IP30
- Compatible via SMPS-T160 with:
  LA12 IC, LA14 IC, LA23 IC, LA25 IC, LA35 IC
- Compatible with:
  LA36 IC, LA37 IC

Controls

EVO

EVO features:

- Dimensions: 125 x 40 x 10 mm
- Compatible with RF receiver

TXP

TXP features:

- Dimensions: 60 x 30 x 10 mm
- Compatible with RF receiver

Accessories

SMPS-T160

The SMPS-T160 is a powerful Switch Mode Power Supply typically used for outdoor applications within the Techline segments. SMPS-T160 is an eco-friendly solution due to a low standby power consumption compared to traditional transformer solutions. The universal input voltage makes the SMPS adaptable to the worldwide market irrespective of the input voltage.

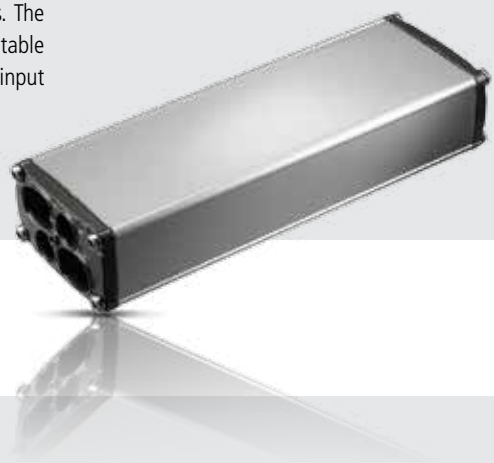

SMPS-T160 features:

- Nominal input voltage (mains voltage): 100 V AC - 240 V AC +10/-15%
- Nominal input frequency: 50 Hz/60 Hz
- Typical standby power consumption: Approx. 0.1 W
- Protection: IP66
- Compatible with LA12 IC™, LA14 IC, LA23 IC, LA25 IC and LA35 IC

Accessories

Bluetooth® Receiver

The small and compact TECHLINE® Bluetooth receiver enables easy control of the actuator with an iPhone 4S and up or an Android device. Its small form factor makes this device easy to implement into your application.

Bluetooth Receiver features:

- Power supply: 24V DC
- Operation current: 20 mA
- Range in open space: up to 12 meters
- Protection class: IP66
- Housing: ABS
- Cables: integrated
- Cable length: 150 mm
- Compatible via SMPS-T160 with:
  LA12 IC™, LA14 IC, LA23 IC, LA25 IC, LA35 IC
- Compatible with:
  LA36 IC, LA37 IC

Accessories

RF Receiver

The small and compact RF receiver enables easy control of the actuator via remote control. Its small form factor makes this device easy to implement into your application.

RF Receiver features:

- Operating temperature: -20° C +45° C
- Working frequency: 868.3 Mhz
- Range in open space: up to 80 meters
- Protection Class: IP66
- Housing material: polycarbonate
- Cables: integrated
- Cable length: 1500 mm
- Compatible via SMPS-T160 with:
  LA12 IC, LA14 IC, LA23 IC, LA25 IC, LA35 IC
- Compatible with:
  LA36 IC, LA37 IC

GLOBAL PRESENCE

Global presence

LINAK® has a well-developed sales and service organisation in Europe, America, Asia and Australia. Therefore, we can assist you and your customers locally, under the global sales concept idea: Be global, act local

INNOVATION

KNOWLEDGE

LEAN

WORLD-CLASS PRODUCTION

PARTNERSHIP

VALUES

We add value to your products by offering innovative solutions, extensive knowledge, world-class production and global presence.

For further information about the TECHLINE product overview:
www.linak.com/techline

Terms of use
The user is responsible for determining the suitability of LINAK products for a specific application. LINAK takes great care in providing accurate and up-to-date information on its products. However, due to continuous development in order to improve its products, LINAK products are subject to frequent modifications and changes without prior notice. Therefore, LINAK cannot guarantee the correct and actual status of said information on its products. While LINAK uses its best efforts to fulfil orders, LINAK cannot, for the same reasons as mentioned above, guarantee the availability of any particular product. Therefore, LINAK reserves the right to discontinue the sale of any product displayed on its website or listed in its catalogues or other written material drawn up by LINAK.

All sales are subject to the Standard Terms of Sale and Delivery for LINAK. For a copy hereof, please contact LINAK.

LINAK®
WE IMPROVE YOUR LIFE

MA M9-02-577-D - 2016.10 - Printer: grafisk arbejde